FRAMECO

WWW.FRAMECO.CA

User's guide and troubleshooting

FOR POWER UNITS

V18

FRAMECO
WWW.FRAMECO.CA

230, Rue du Parc
Saint-Joseph-de-Beauce
(Quebec) G0S 2V0

Phone: 418 397.6895
Toll-free: 1 888 235.6895
Customer service: 1 888 235.6895 (option 2)
Fax: 418 397.6881

Opening hours

Monday	8h to 12h - 13h to 17h
Tuesday	8h to 12h - 13h to 17h
Wednesday	8h to 12h - 13h to 17h
Thursday	8h to 12h - 13h to 17h
Friday	8h to 12h - 13h to 16h
Saturday	Closed
Sunday	Closed

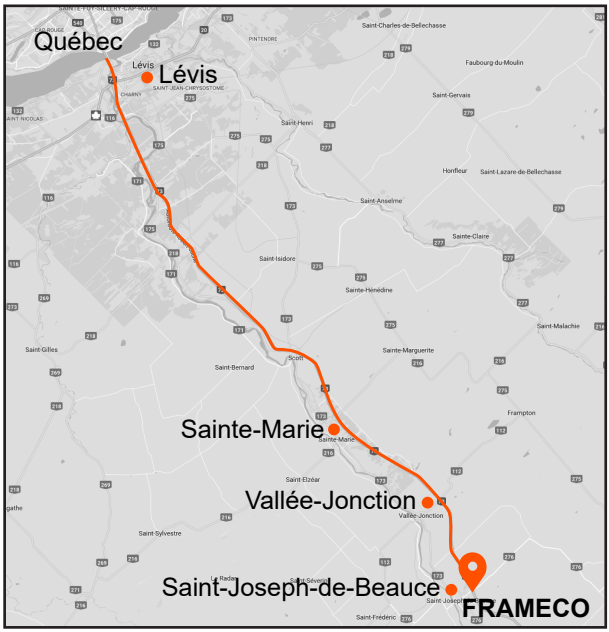

TABLE OF CONTENTS

Contact informations p.2

Limited warranty

- Limited warranty..... **p.4**
- Exclusions..... **p.4**
- Claim procedures..... **p.5**

Operation and maintenance

- Understanding your power unit **p.5**
- Electrical connection..... **p.6**
- Hydraulic connection..... **p.6**
- Maintenance..... **p.7**
- Single-acting hydraulic power unit components..... **p.8**
- Double-acting hydraulic power unit components..... **p.9**
- 110V/220V manual hydraulic power unit components... **p.10**
- Double-double-acting hydraulic power unit components... **p.11**
- P.A.T. hydraulic power unit components..... **p.12**

Troubleshooting guide p.13

Telescopic cylinder

- How to purge the cylinder ?..... **p.14**
- Calculation of telescopic cylinder stroke..... **p.15**
- Force calculating of telescopic cylinder..... **p.15**
- Strenght chart of hydraulic cylinder..... **p.16**

Standard power unit (91717P-C6) p.17

Engine power unit (HYPM65) p.18

LIMITED WARRANTY

This operating and troubleshooting manual for power units is intended to familiarize the owner with good operating and maintenance practices. It is therefore imperative to read this document to ensure the longevity of your power units.

Frameco strongly recommends that all maintenance operations and repairs are performed by qualified and competent professionals.

Your safety and that of others is paramount, so the use, maintenance and storage of power units is an important responsibility.

For any additional questions regarding power units manufactured by Frameco, contact our experts at 1 888 235.6895.

LIMITED WARRANTY

Frameco offers a limited warranty, granted exclusively to the person or organization that made the initial purchase:

- **One (1) year** parts and labor on all power units.
- **Two (2) years** parts and labor on hydraulic cylinders, from the date of purchase on the sales invoice.

If disassembly, modification, missing part or misuse, the warranty offered by Frameco will not apply. This warranty applies to all power units.

EXCLUSIONS

Frameco disclaims any and all liability or obligation under the limited warranty or any other warranty relating to :

1. Parts not supplied by Frameco;
2. Any damage caused or connected to an intervention on the power unit, including the welding of special supports;
3. Normal wear and tear;
4. To a bad installation;
5. To aesthetic finish or corrosion;
6. Contamination of oil in power units and cylinders.

***For trunks with power units that have been drilled, Frameco will ship the new power unit and the initial trunk.**

CLAIM PROCEDURES

What you need to do :

1. Within the warranty period, you must notify the Service Department (1 888-235-6895 (option 2)) or via service@frameco.ca for any defects in your power unit and provide us with all required documents :
   - **Serial number (if available)**
   - **Invoice number**
   - **Picture of the defective part**
2. Following Frameco's approval, you will be issued a Return of Parts Number (RGA). **It is imperative that you receive Frameco's approval in the form of a Return Number (RGA) before starting any work, otherwise no refund will be awarded.**
3. Finally, keep the defective parts for shipping to Frameco.

Hydraulic systems must be installed and maintained in accordance with the appropriate industry practices and the explicit recommendations of Frameco, including those outlined in this *User's guide and Troubleshooting*.

Depending to its choice, Frameco will replace, to the original owner, the defective parts or refund the listed price of these parts. Only installation costs allocated and explicitly approved by Frameco will be paid for.

UNDERSTANDING YOUR POWER UNIT

Voltage	Electrical components can be damaged if the voltage source is inadequate.
Amperage	Some components of the power unit can be seriously damaged or burned if the amperage is too high.
Oil	The pump, activators and valves may be damaged if the oil is contaminated or incompatible. Moreover, the maintenance of hydraulic units represents an important responsibility. Frameco recommends: ***Grade 22 SAE, Dexron Oil III or better.***
Environment	To ensure the longevity and performance of power units, it is important to pay particular attention to all aspects related to the working environment. **YOU MUST INSTALL YOUR POWER UNIT SO THAT NEVER EXPOSED TO THE ELEMENTS**.

WARNING
Before starting to use power units, it is important to check adequately the connection and the intensity of the electric current.

ELECTRICAL CONNECTION

Frameco reminds you that all power units are assembled with a starter solenoid mounted directly on the DC motor. See the drawing below :

Procedure:

Install the positive battery on the terminal (1) of the starter solenoid and connect the negative of the battery to the terminal (2) located on the electric motor.

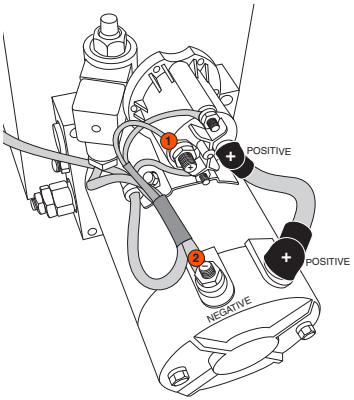

Choice of cable

The selection of the power cable can bring some problems if the diameter is inadequate. It is therefore imperative to measure the distance between the power unit and the battery. Frameco recommends that the negative cable be of equivalent diameter or larger than the positive cable.

	0-100 amp	100-150 amp	150-200 amp	200-250 amp	250-300 amp
60'- 70'	# 1	# 00			
50'- 60'	# 2	# 0	# 0		
40'- 50'	# 2	# 1	# 0	# 00	
30'- 30'	# 4	# 1	# 0	# 00	# 00
20'- 30'	# 4	# 2	# 1	# 0	# 00
10'- 20'	# 4	# 2	# 1	# 0	# 00
0'- 10'	# 4	# 2	# 1	# 0	# 00

WARNING

Frameco strongly recommends that all maintenance operations and repairs are performed by qualified and competent professionals.

HYDRAULIC CONNECTION

Be sure to fill the tank of the power unit with products compatible with all the components of the unit.

If your hydraulic system has multiple cylinders, it is recommended to purge them one at a time. When all the actuators have been purged, return them to the rest position, recheck the oil level in the tank and refill it if necessary.

MAINTENANCE

All power units from Frameco are carefully tested and designed to provide maximum performance for many years. Rigorous maintenance is therefore necessary to promote the longevity of power units.

Fittings and hoses	Fittings and hoses should be kept clean at all times to prevent contamination.
Connections	Check electrical connections and seals at regular frequency.
Breather	Clean or change the breather (#HYFC01) if there are contaminants to promote better performance of the power units.
Tightening bolts	To tighten the bolts on the positive and negative motor, hold the bottom bolt with a wrench and tighten the top bolt carefully. A tightening torque must not exceed 8 lbs.
Solenoid valve (#HYSV082)	To lower the cylinder when there is no battery, turn counter-clockwise. The cylinder will be operated in descent mode. You must close the valve again afterwards.
Oil level	The oil level inside the tank should be checked and refilled as needed. If you notice a change in the demand for oil in the tank, your system may leak. It is therefore important to check all adapters, gaskets and hoses to identify the source of the adapter and correct it as soon as possible.
Oil change	At all times, keep the oil tank at the correct level and change the oil after 100 hours of use the first time and once a year thereafter, depending on your use. Be sure to fill the unit tank with products that are compatible with the hydraulic component kit **(Grade 22 SAE, *Dexron Oil III* or better).**
Filtration of the system	All power units are equipped with a vented plug (#HYFC01) that helps prevent the entry of contaminants from external air. Over time, the plug may become clogged and should be replaced. In addition, a suction filter (#HYG38) is installed on the inlet of the pump, inside the tank. Clean or replace this filter according to a regular routine.

SINGLE-ACTING HYDRAULIC POWER UNIT COMPONENTS

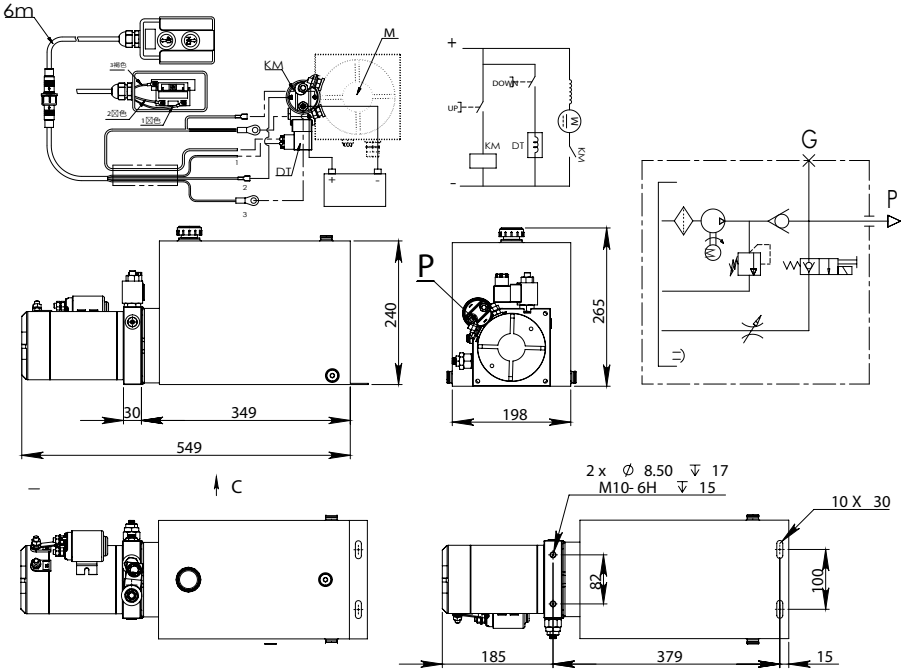

Tank types	
2 gal. / 8 L	#HYR8L
4 gal. / 16 L	#HYR16L
6 gal. / 20 L	#HYR20L
8 gal. / 30 L	#HYR30L

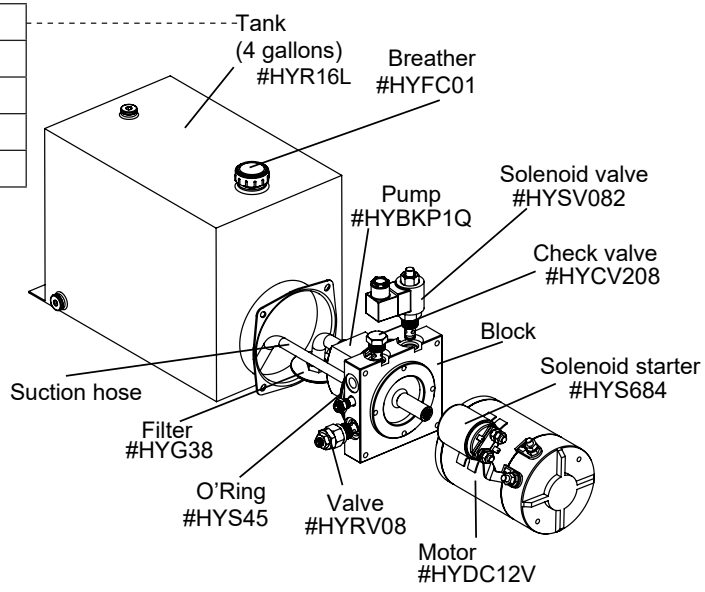

DOUBLE-ACTING HYDRAULIC POWER UNIT COMPONENTS

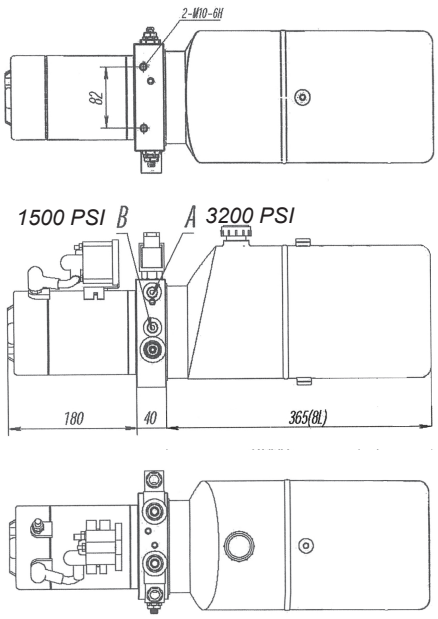

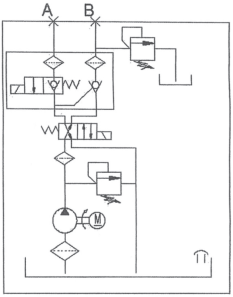

HYDRAULIC CIRCUIT

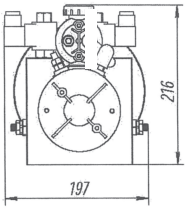

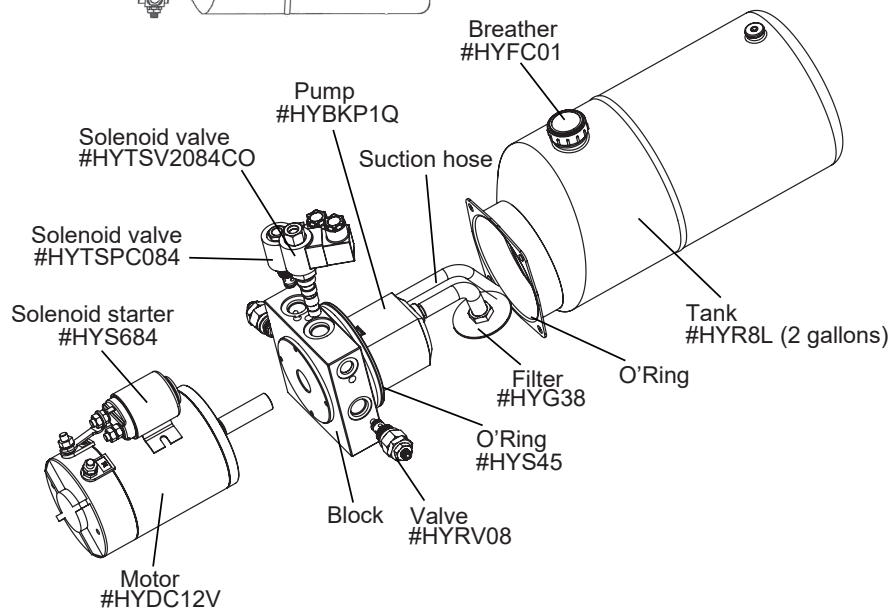

110V/220V MANUAL HYDRAULIC POWER UNIT COMPONENTS

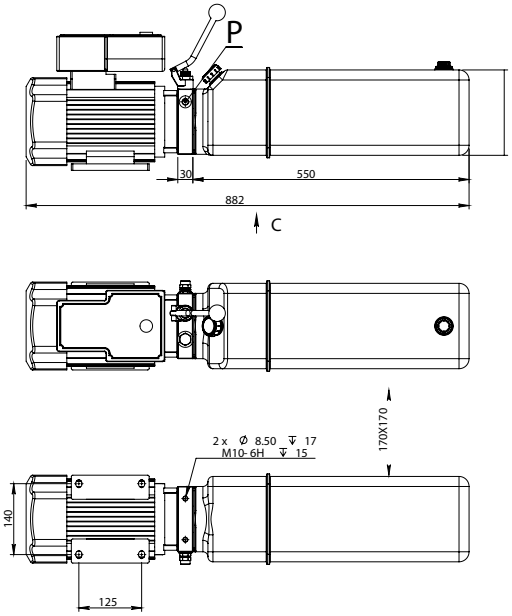

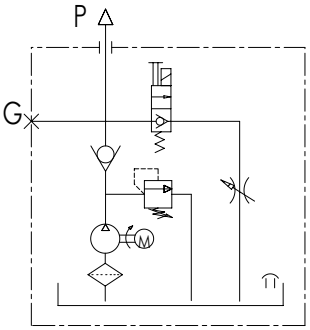

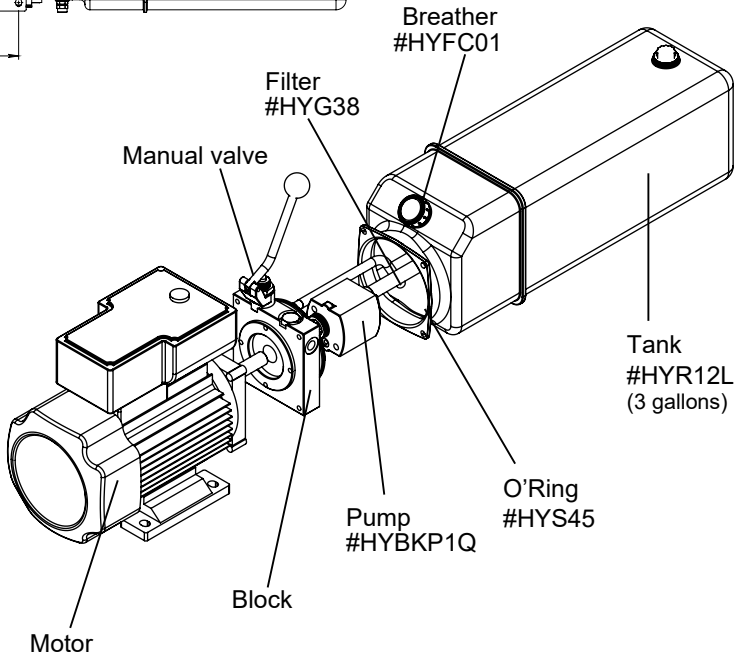

DOUBLE-DOUBLE-ACTING HYDRAULIC POWER UNIT COMPONENTS

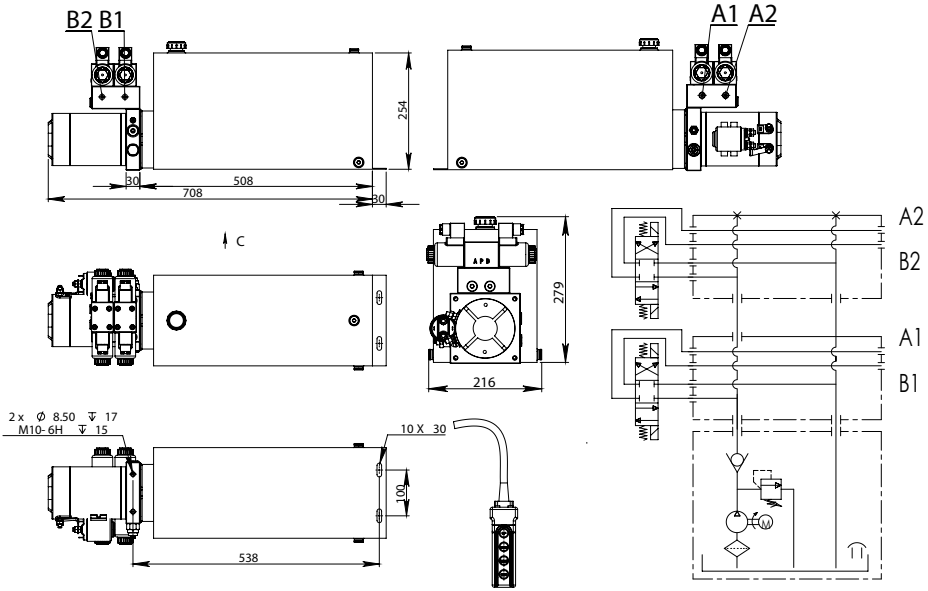

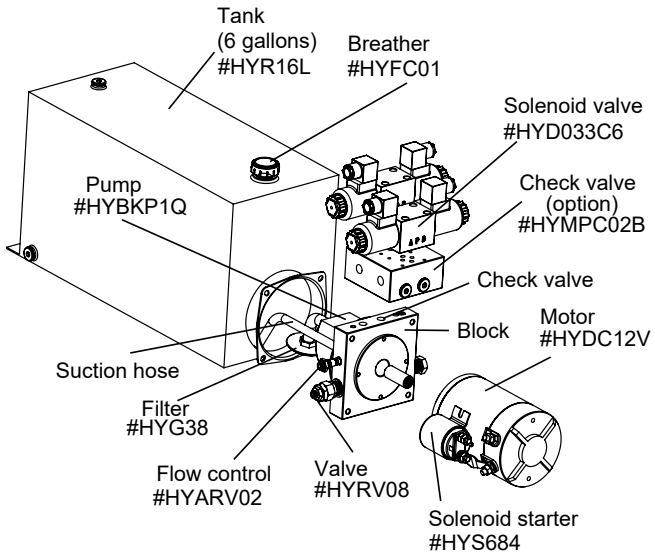

P.A.T. HYDRAULIC POWER UNIT COMPONENTS (PRESSURE AT TANK)

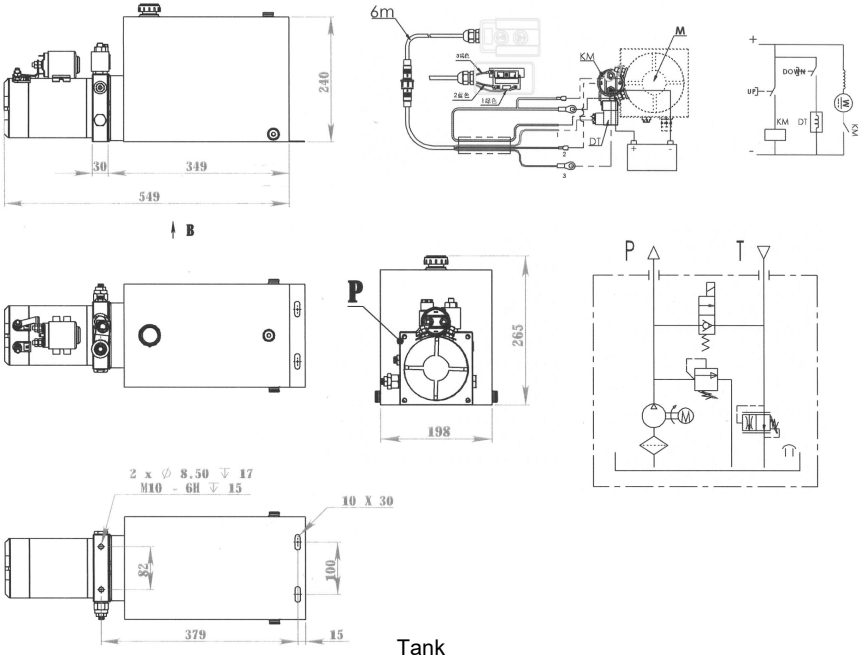

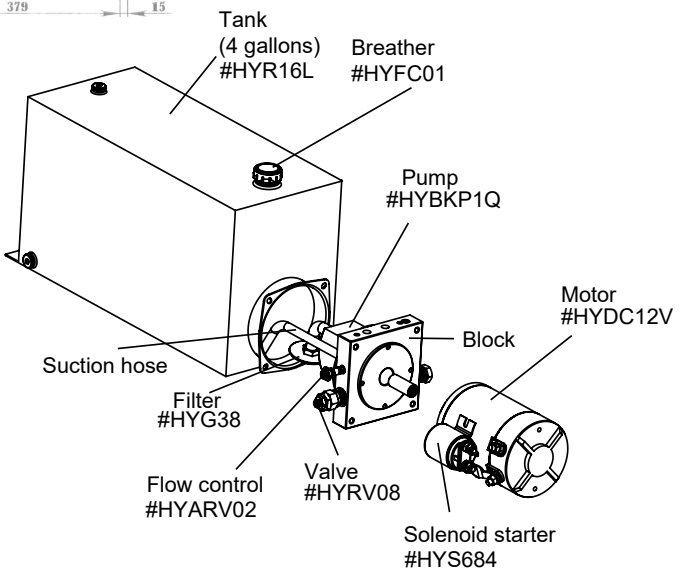

TROUBLESHOOTING GUIDE

PROBLEMS	REQUIRED ACTIONS
Engine does not work	• Check the DC motor connection and switch. • Check the cable that connects the motor terminal to the starter solenoid. • Check the remote control.
The starter solenoid engages, but the engine does not active	• Check if the wires are in place on the terminals. • Check that the correct wire diameter has been used to connect the motor. • Check if the solenoid starter housing is cracked. If yes, replace the solenoid. • If the unit is older, visually check for accumulation of excessive rust.
The unit lowers too slowly	• Unscrew the adjustment nut 1/4″ maximum (#HYSV082).
The electric motor does not stop working even if you release the button	• **The starter solenoid does not stop** A weak battery or poor grounding may have soldered the starter solenoid. Replace it and check the condition of the battery and the connection wiring.
Excessive heat of the unit	• **Low battery or bad grounding** Improper grounding connection or low battery may cause the engine to operate at a high temperature. Check the condition of the battery and the connection wiring. Do not operate the unit too long. If excessive heat persists, return for verification. • **Safety valve remains open** If the relief valve is not properly adjusted or if debris has settled inside and remains open, this will generate a lot of heat in the oil. Remove the valve. Clean with brake cleaner or varsol. Dry with pressurized air and replace the check valve (couple at 22 Nm). Restart the unit and adjust the valve to the system safety pressure (see sticker on the tank).
Pressure problem	• Locate the manual bypass of the solenoid valve. Rotate counter-clockwise to the end. The valve is now closed and should operate normally (# HYSV082).

If you have any other problem with the power unit, please contact one of our experts at 1 888 235.6895.

IMPORTANT
For the model HYP6GDD equipped with HYD033C6 valve, the battery must always be full load, because it must have a minimum of 11 volts to activate the valve which will proceed to the descent. Activate the valve manually at the end of the drawer.

HOW TO PURGE THE CYLINDER ?

- Fill the cylinder with oil and lift a few inches;
- Open the bleed screw on the top of the cylinder a few turns andthe air will begin to expel;
- Tighten the screw and raise again;
- Repeat until no more air is exhaled;
- Check that the cylinder is rising at an equal speed.

IMPORTANT

In winter, when it is very cold, the cylinder may be slower. Check the viscosity of oil **(Grade 22 SAE*, Dexron Oil III* or better)**. It is important to carry out rigorous maintenance and assisted inspection to optimize the longevity of your power unit.

Telescopic cylinder

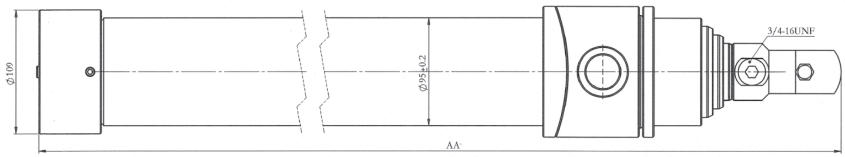

1. Intel port ORB/8
2. Spherical bearing on first action to prevent a hide loading eliminate some leakage
3. Micro-honed inside and chrome plated outside to decrease corrosion, wear resistance and durability
4. O'Ring between trunnion and body to reduce noise
5. Groove on trunnion for better lubrication

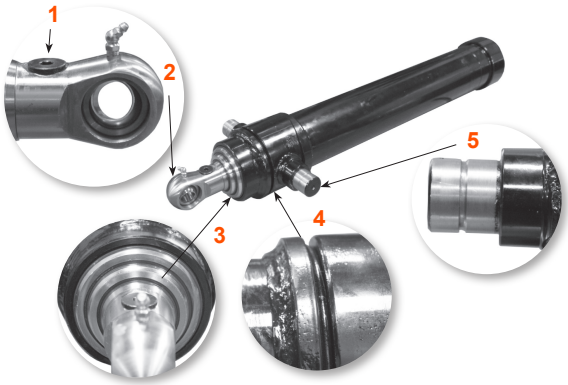

IMPORTANT

It is important to maintain your telescopic cylinder every month.
Lubricate with an enema resistant grease.

CALCULATION OF TELESCOPIC CYLINDER STROKE

"A" x "B" = "C" (APPROXIMATE STROKE)

Example: 166" (A) x .845 (B) = 140" (C)

Dump Angle Multipliers

"B" =	Dump Angle
.715 =	42°
.733 =	43°
.750 =	44°
.765 =	45°
.780 =	46°
.797 =	47°
.813 =	48°
.830 =	59°
.845 =	50°
.861 =	51°
.877 =	52°
.892 =	53°
.903 =	54°
.923 =	55°
.939 =	56°
.954 =	57°

Angle normal munimum 45°
Angle normal maximum 57°

* For trailer, we use 45° to 50°.

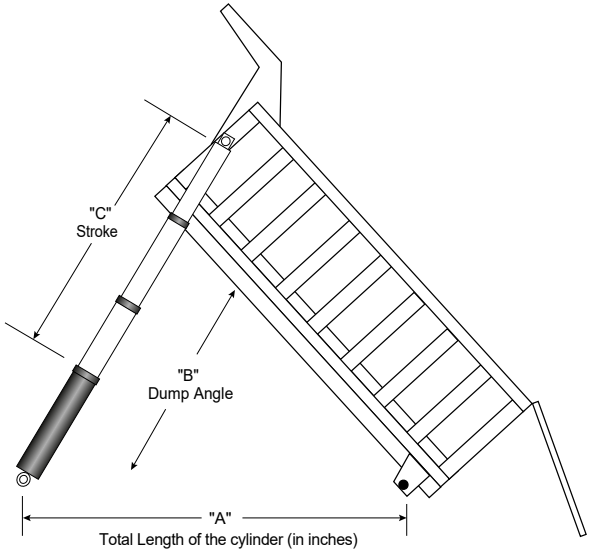

FORCE CALCULATING OF TELESCOPIC CYLINDER (EXTENSION)

In order to calculate the maximum force that a cylinder can produce when expanding, you must know the piston area of this cylinder and the maximum system pressure.

The following formulas are used in the calculation:		
Radius (PISTON)	=	$\frac{\text{Orifice diameter}}{2}$
Surface (PISTON)	=	π x radius² (PISTON)
Force (CYLINDER)	=	Pressure x surface (PISTON)

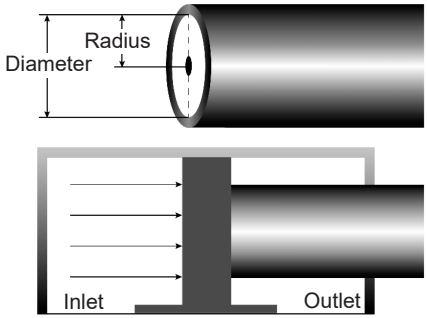

Example: If a cylinder has a 3″ orifice diameter in a system that provides 3000 PSI, what force can it produce by expanding ?

Piston radius	Piston surface	Cylinder strenght
$\frac{3''}{2}$ = 1.5 po	*π x 1.5² = 7.065 sq. po *3.14 x (1.5 x 1.5)= 7.065 sq. po	3000 PSI x 7.065 sq.po = 21 195 lbs

STRENGHT CHART OF HYDRAULIC CYLINDER

To determine the strenght of the cylinder, find the size of the cylinder bore (and the size of the rod if you determine the retraction force) and the pressure used.

Orifice dia.	Stem dia.	Surface (sq.po.)	1000 PSI (lbs)	1500 PSI (lbs)	2000 PSI (lbs)	2500 PSI (lbs)	3000 PSI (lbs)
1″	-	0,79	790	1185	1580	1975	2370
	5/8″	0,48	480	720	960	1200	1440
1 1/2 ″	-	1,76	1760	2640	3520	4400	5280
	1″	0,98	980	1470	1960	2450	2940
2″	-	3,14	3140	4710	6280	7850	9420
	1 1/8 ″	2,15	2150	3225	4300	5375	6450
	1 1/4 ″	1,91	1910	2865	3820	4775	5730
2 1/2 ″	-	4,91	4910	7365	9820	12 275	14 730
	1 1/8 ″	3,92	3920	5880	7840	9800	11 760
	1 1/4 ″	3,68	3680	5520	7360	9200	11 040
	1 1/2 ″	3,14	3140	4710	6280	7850	9420
3″	-	7,07	7070	10 605	14 140	17 675	21 210
	1 1/4 ″	5,84	5840	8760	11 680	14 600	17 520
	1 1/2 ″	5,30	5300	7950	10 600	13 250	15 900
	1 3/4 ″	4,67	4670	7005	9340	11 675	14 010
3 1/2 ″	-	9,62	9620	14 430	19 240	24 050	28 860
	1 1/4 ″	8,39	8390	12 585	17 780	20 975	25 170
	1 3/4 ″	7,22	7220	10 830	14 440	18 050	21 660
	2″	6,48	6480	9720	12 960	16 200	19 440
4″	-	12,56	12 560	18 840	25 120	31 400	37 680
	1 1/4 ″	11,33	11 330	16 995	22 660	28 325	33 990
	1 1/2 ″	10,79	10 790	16 185	21 580	26 975	32 370
	1 3/4 ″	10,16	10 160	15 240	20 320	25 400	30 480
	2″	9,42	9 420	14 130	18 840	23 550	28 260
	2 1/4 ″	8,58	8 580	12 870	17 160	21 450	25 470
5″	-	19,63	19 630	29 445	39 260	49 075	58 890
	2″	16,49	16 490	24 735	32 980	41 225	49 470
	2 1/2 ″	14,72	14 720	22 080	29 440	36 800	44 160

STANDARD POWER UNIT (91717P-C6)

BOX
DZ91717P (PLASTIC)
91717A2MM (ALUMINUM)

BREATHER
HYBV34

HYDRAULIC HOSE
ASSY14CUT90
SEVERAL CHOICES

CHECK VALVE
HYCV208

SOLENOID VALVE
HYTSV2084CO HYSV082
HYTSPC084 HYSV083
HYSV2084 (DOUBLE-ACTING)

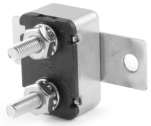

BREAKER
C58360 (OPTION)

TANK
HYR8L (2 GALLONS)
HYR12L (3 GALLONS)
HYR16L (4 GALLONS)
HYR20L (6 GALLONS)
HYR30L (8 GALLONS)

SWITCH
PN023
PN024

BATTERY HOLDER
11854 (GROUP 27)

BATTERY CABLE
T4118RD (RED)
T4124BK (BLACK)
T4124RD (RED)

REMOTE CONTROL
HYM10 (SINGLE-ACTING)
HYM20 (DOUBLE-ACTING)
HYM40 (DOUBLE-ACTING)

RELIEF VALVE
HYRV08

CONNECTOR
W003CM (DOUBLE-ACTING)
W003CF

SOLENOID STARTER
HYS684

BATTERY CHARGER
HYB1215

MOTOR
HYDC12V
SEVERAL CHOICES

MAINTENANCE

Filter of motor	Clean up the air cleaner core once every 50 hours (every 10 hours in unusually dusty circunstance). Clean the foam filter element with home detergents, and the paper filter element by knocking against a solid plane or blow out dust with high-pressure air flow. Never clean with a brush.
Oil change	**Motor:** Change the engine oil once a year (refer to the engine manufacturer's guide). **Hydraulic oil:** At all times, keep the oil tank at the correct level and change the oil after 100 hours of use the first time and once a year thereafter, depending on your use. Be sure to fill the unit tank with products that are compatible with the hydraulic component kit **(Grade 22 SAE, *Dexron Oil III* or better).**
Filter	Change the oil filter once a year (#HFA11015).
Spider	Check the status of the spider frequently. If it is worn, please replace it (#8991399).
Protection	Protective cover is recommended at all times.
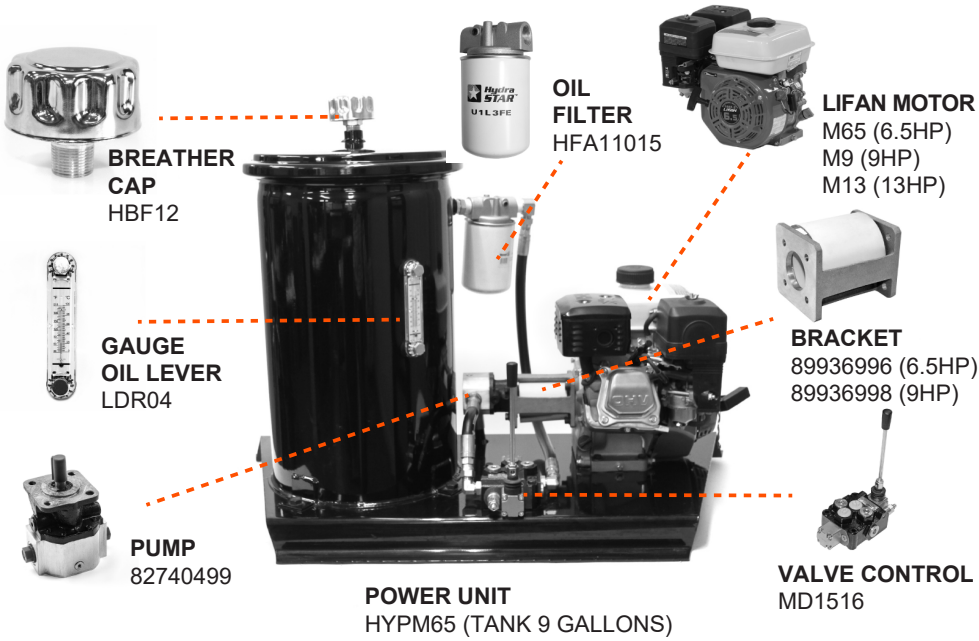
Frameco strongly recommends that all maintenance operations and repairs are performed by qualified and competent professionals.